Appendix A
THE SPECIAL THEORY OF RELATIVITY

The object of this appendix is to develop those results of Einstein's special theory of relativity that we shall need in our study of quantum physics. Of course it is likely that many students will have worked with relativity, in studying classical mechanics and/or electromagnetism, before embarking on the study of quantum physics. For those students, this appendix can be useful as a review. For others, it should be useful as a concise treatment of the most important results of relativity.

THE GALILEAN TRANSFORMATION AND MECHANICS

In classical physics the *state* of a mechanical system at some instant can be described completely by constructing a frame of reference and using it to specify the coordinates, and the time derivative of the coordinates, for the particles comprising the system at that instant. If we know the masses of the particles and the forces acting between them, Newton's equations of motion make it possible to calculate the state of the system at any future time in terms of its state at the initial time. Now, it is often desirable that during or after such a calculation we specify the state of the system in terms of a new frame of reference which is moving in translation (i.e., not rotating) relative to the first frame with constant velocity. Two questions arise: (1) How do we transform our description of the system from the old to the new frame? (2) What happens to the equations which govern the behavior of the system when we make the transformation? These questions are the ones with which the special theory of relativity concerns itself. (In the general theory, which we shall not need in our study of quantum physics, transformations involving acceleration of one frame relative to the other are considered.)

Figure A-1 shows a particle of mass m whose motion under the influence of force $\mathbf{F}$ is specified in terms of a primed and an unprimed frame of reference. The primed frame is moving relative to the unprimed frame with constant velocity $\mathbf{v}$ in a direction which, by construction, is the positive direction of their collinear x' and x axes. By definition, the times t' and t mea-

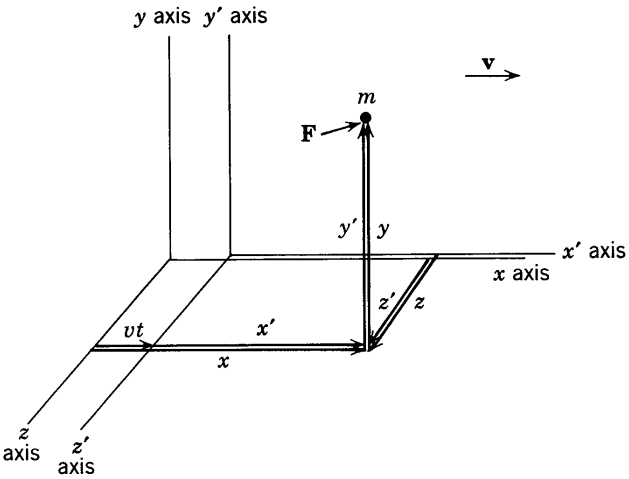

Figure A-1 An x', y', z', t' frame of reference moving in translation with constant velocity $\mathbf{v}$ relative to an x, y, z, t frame. The x' and x axes are supposed to be collinear.

sured in the two frames are both zero at the instant when the $y'z'$ plane coincides with the yz plane. With these two frames there are two sets of four numbers, (x',y',z',t') and (x,y,z,t), that can equally well be used to specify the coordinates of the particle at any instant of time. What are the relations between these sets of numbers? According to classical physics they are

$$\begin{aligned} x' &= x - vt \\ y' &= y \\ z' &= z \\ t' &= t \end{aligned} \tag{A-1}$$

These are known as the *Galilean Transformation.* The simple arguments of classical physics leading to them are:

1. If the zeros of the time scales used in different frames are defined to be the same at any time and location, then in classical physics both time scales will remain the same for all times and all locations, so $t' = t$.
2. Since by construction the $x'y'$ and xy planes always coincide, we have $z' = z$; and similarly for $y' = y$.
3. Since in the time interval between zero and $t' = t$ the $y'z'$ plane moves in the positive direction a distance vt, the x' coordinate will be smaller than the x coordinate by that amount. So $x' = x - vt$.

The Galilean transformation constitutes the answer that classical physics gives to the first question posed earlier.

The answer to the second question is given in classical mechanics by using the Galilean transformation to convert Newton's equations in the x, y, z, t frame

$$m\frac{d^2x}{dt^2} = F_x \qquad m\frac{d^2y}{dt^2} = F_y \qquad m\frac{d^2z}{dt^2} = F_z \tag{A-2}$$

into whatever form these equations assume in the x', y', z', t' frame. Note that for (A-2) to be valid the x, y, z, t frame must be an *inertial frame*; i.e., one in which a body not under the influence of a force, and initially at rest, will remain at rest.

By differentiating each of the first three of (A-1) twice with respect to t, and then using the fourth to write $t = t'$, it is trivial to show that

$$\frac{d^2x'}{dt'^2} = \frac{d^2x}{dt^2} \qquad \frac{d^2y'}{dt'^2} = \frac{d^2y}{dt^2} \qquad \frac{d^2z'}{dt'^2} = \frac{d^2z}{dt^2}$$

In other words, the acceleration of the mass m measured in the primed frame is the same as it is when measured in the unprimed frame. Of course, the reason is that two frames related by a Galilean transformation are not accelerating with respect to each other, so the transformation does not change the measured acceleration. Furthermore

$$F_{x'} = F_x \qquad F_{y'} = F_y \qquad F_{z'} = F_z$$

because the component of the force $\mathbf{F}$ acting on m in the direction of the x' or x axis is the same as seen in either frame, and similarly for its other components. Evaluating the unprimed components of acceleration and force in (A-2) in terms of their primed counterparts, but doing nothing to the mass, since in classical physics mass is an intrinsic property of a particle whose value cannot depend on the frame of reference, we find the equations of motion in the primed frame

$$m\frac{d^2x'}{dt'^2} = F_{x'} \qquad m\frac{d^2y'}{dt'^2} = F_{y'} \qquad m\frac{d^2z'}{dt'^2} = F_{z'} \tag{A-3}$$

Note that (A-3) have exactly the same mathematical form as (A-2). Thus part of the answer to the second question is that Newton's equations, which govern the behavior of the mechanical system, do not change when we make a Galilean transformation. The x, y, z, t frame was an inertial frame because $d^2x/dt^2 = d^2y/dt^2 = d^2z/dt^2 = 0$ if $\mathbf{F} = 0$. From (A-3) we see that x', y', z', t' is also an inertial frame because $d^2x'/dt'^2 = d^2y'/dt'^2 = d^2z'/dt'^2 = 0$ if $\mathbf{F} = 0$.

Since Newton's equations are identical in any two inertial frames, and since the behavior of a mechanical system is governed by these equations, it follows that the behavior of all mechanical systems will be identical in all inertial frames, although these frames move at constant velocity with respect to each other. This prediction is verified by a wide variety of experimental evidence.

THE GALILEAN TRANSFORMATION AND ELECTROMAGNETISM

Next we inquire into the behavior of electromagnetic systems when we perform a Galilean transformation. Electromagnetic phenomena are treated in classical physics in terms of Maxwell's equations, which govern their behavior just as Newton's equations govern the behavior of mechanical phenomena. We shall not actually carry through the Galilean transformation of Maxwell's equations, as we have for Newton's, since the calculation is complicated. Instead we shall state the results: Maxwell's equations *do* change their mathematical form under a Galilean transformation, in sharp contrast to the behavior of Newton's equations. We shall also discuss the physical significance of these results.

As the student probably knows, Maxwell's equations predict the existence of electromagnetic disturbances which propagate through space in the characteristic manner of wave motion. The nineteenth century physicists, who were very mechanistic in their outlook, felt quite sure that the propagation of waves predicted by Maxwell's equations requires the existence of a mechanical propagation medium. Just as sound waves propagate through a mechanical medium, air, so, according to their view, electromagnetic waves must propagate through a mechanical medium, which they called the *ether*. This propagation medium was required to have quite strange properties in order not to disagree with certain known facts. For instance, it would have to be massless since electromagnetic waves such as light can travel through vacuum; but it would have to have elastic properties to be able to transmit the vibrations inherent in the idea of wave motion. Nevertheless, physicists of that era felt the concept of the ether was more attractive than the alternative of electromagnetic waves propagating without the aid of a propagation medium.

It was assumed that the electromagnetic equations in the form presented by Maxwell were valid for the frame of reference at rest with respect to the ether, the so-called *ether frame*. A solution of these equations led to a prediction of the magnitude of the propagation velocity of electromagnetic waves in vacuum. The result was 2.998×10^8 m/sec $\equiv c$, in agreement within experimental error with the value of the velocity of light that had been measured by Fizeau. However, in a frame of reference moving with constant velocity with respect to the ether, Maxwell's equations changed form when the Galilean transformation was used to evaluate them in that moving frame. As might be expected, when these changed equations were used to obtain a prediction of the electromagnetic wave propagation velocity that would be measured in the frame moving with respect to the ether, the velocity was found to have a magnitude different from c.

The complicated calculation which predicted the velocity of light measured in a frame of reference moving with respect to the ether, performed by making a Galilean transformation of Maxwell's equations to the moving frame and then solving them in that frame, led to the simple prediction

$$\mathbf{v}_{\text{light wrt moving frame}} = \mathbf{v}_{\text{light wrt ether}} - \mathbf{v}_{\text{moving frame wrt ether}} \tag{A-4}$$

where wrt = with respect to, and $v_{\text{light wrt ether}} = c$. The prediction agreed with two simple physical ideas:

1. Light propagates with a velocity of fixed magnitude c with respect to its propagation medium, the ether, just as sound waves propagate with a velocity of fixed magnitude with respect to their propagation medium, the air.
2. The velocity of light with respect to a frame moving with respect to the ether can be found from a normal vector addition of relative velocities.

It should be pointed out that the arguments justifying vector addition of velocities are really the same as those justifying the Galilean transformation. For instance, in a case when all motion is along the x' or x axis, (A-4) can be obtained immediately by a time differentiation of the first of (A-1), using also the fourth one, $t' = t$.

In summary, theoretical physics near the end of the nineteenth century was based on three fundamentals: Newton's equations, Maxwell's equations, and the Galilean transformation. Almost everything that could be derived from these fundamentals agreed well with the experiments that had been performed to that time. With regard to the questions we have been discussing, they predicted that reference frames in uniform motion with respect to each other were completely equivalent as far as mechanical phenomena were concerned, but in regard to

electromagnetic phenomena they were not equivalent; there was only one frame, the ether frame, in which the velocity of light had a magnitude with the numerical value c.

THE MICHELSON-MORLEY EXPERIMENT

In 1887 Michelson and Morley carried out an experiment which proved to be of extreme importance. The experiment was designed to investigate the motion of the earth with respect to the ether frame. Since the earth is moving about the sun, it would seem unrealistic to make the *a priori* assumption that the ether frame travels with the earth and, as we shall indicate later, experimental observations arguing against such an assumption were known at the time. It would be much more reasonable to assume that the ether frame was at rest with respect to the center of mass of the solar system, or the center of mass of the universe. In the first case the velocity of the earth with respect to the ether frame would have a magnitude of the order of 10^4 m/sec; in the second case the magnitude of the velocity would be somewhat greater. The basic idea of the experiment was to measure the velocity of light in two perpendicular directions from a frame of reference fixed to the earth. A moment's consideration of the classical theory, as summarized by the vector addition (A-4), will show that the theory predicts the measured velocities should have different magnitudes for light traveling in different directions relative to the direction of motion of the observer through the ether.

Although the difference in the two measured light velocities was expected to be small, because the velocity of the earth with respect to the ether is small compared to the velocity of light with respect to the ether, Michelson and Morley built a device incorporating an interferometer that should have been more than sensitive enough to detect and measure the difference. To their extreme surprise, they could not even detect a difference. They, and many other subsequent investigators, repeated the measurements with improved equipment, but an effect was never observed. Despite the predictions of the classical theory, the Michelson-Morley experiment showed that the velocity of light has the same magnitude, c, measured in perpendicular directions in a reference frame which is, presumably, moving through the ether frame.

These results captured the attention of most physicists, and a number of them tried to devise explanations that would be consistent with the Michelson-Morley results and yet retain as much as possible of the physical theories then in existence. Notable among them were the "ether drag hypothesis" and the "emission theory."

The ether drag hypothesis assumed that the ether frame was locally attached to all bodies of finite mass. It was attractive because it would explain the Michelson-Morley results and yet did not involve modification of the existing theories. But it could not be accepted for several reasons, the principal one having to do with an astronomical phenomenon called stellar aberration. It had been known since the 1700s that the apparent positions of stars move annually in circles of very small diameter. This is a purely kinematical effect due to the motion of the earth about the sun; in fact, it is the same as the effect causing a vertical shower of rain to appear to a moving observer to be falling at an angle to the vertical. From this analogy it is easy to see that stellar aberration would not be present if light were to travel with velocity of fixed magnitude with respect to the ether frame, and if that frame were dragged along by the earth.

In the emission theory Maxwell's equations are modified in such a way that the velocity of light remains associated with the velocity of its source. This too would explain the Michelson-Morley results since their light source was fixed to the interferometer used to measure the light velocity difference, but it must be rejected because it conflicts with astronomical measurements concerning binary stars. Binary stars are pairs of stars which are rotating rapidly about their common center of mass. Consider such a pair at a time when one is moving toward the earth and the other is moving away. Then, if the emission theory is valid, relative to the earth the velocity of the light from one star would be larger than that of the light from the other star. This would cause the stars to appear to move in very unusual orbits. However, in 1913 De Sitter showed that observed motions of binary stars are accurately accounted for by Newtonian mechanics when the velocity of the light they emit is taken to have a magnitude independent of their motion.

All the experimental evidence (including evidence from a number of highly accurate contemporary experiments) is consistent only with the conclusion that there is no *special frame* of reference, the ether frame, with the unique property that the velocity of light measured in

that frame alone has a magnitude equal to c. Just as for inertial frames and mechanical phenomena, *all frames* in relative motion with constant velocity are equivalent in that the velocity of light measured in each frame has the same magnitude c. To succinctly put the *experimental evidence*:

The velocity of light in vacuum is independent of the motion of the observer and of the motion of the source.

EINSTEIN'S POSTULATE

Einstein, in 1905, was the first to realize that physicists should abandon the fruitless and misleading concept of the ether. In essence, he accepted the fact that light propagates through vacuum, and that vacuum really is empty! With no ether frame, the only frame of reference that can have any significance to an observer measuring the velocity of light is the frame fixed relative to himself. Then it is not surprising that an observer in all cases obtains the same numerical result, c, when he measures the magnitude of the velocity of light. Einstein stated as a *postulate*:

The laws of electromagnetic phenomena, as well as the laws of mechanics, are the same in all inertial frames of reference, despite the fact that these frames move with respect to each other. Consequently, all inertial frames are completely equivalent for all phenomena.

This postulate required that Einstein modify either Maxwell's equations or the Galilean transformation, since the two together imply the contrary of the postulate. Although in 1905 the emission theory could still be considered acceptable, he chose not to modify Maxwell's equations. He was then forced to modify the Galilean transformation. This was a bold move. The intuitive belief in the validity of the Galilean transformation was so strong that his contemporaries had never seriously questioned it. Yet, as we shall see, the very different transformation that Einstein adopted in lieu of the Galilean one is based on realistic physical considerations, whereas the Galilean transformation is grossly unrealistic. Another indication of the boldness of Einstein is that our earlier considerations imply that any modification of the Galilean transformation would require some compensating modification of Newton's equations in order that the postulate continue to be satisfied for mechanics. We shall see soon what results this leads to, but first we must study the new transformation equations.

SIMULTANEITY

Consider the fourth of the Galilean transformation (A-1), which is

$$t' = t$$

The equation says there is the same time scale at all places and for all times in any two frames of reference moving uniformly with respect to each other. This is equivalent to saying that there exists a universal time scale for all such frames. Is this true? To find out we must realistically investigate the procedures used in time measurement.

Let us first concern ourselves with the problem of defining a time scale in a single frame. Now the basic process involved in any time measurement is a measurement of simultaneity. As Einstein wrote, "If I say 'That train arrives here at 7 o'clock,' I mean something like this: 'The pointing of the small hand of my watch to 7 and the arrival of the train are simultaneous events'." Of course there is no problem at all in determining the simultaneity of events which occur at essentially the same location, like the train and the *nearby* watch or clock used to time its arrival. But there is a problem in determining the simultaneity of events which occur at *separated* locations. In fact this is the key problem involved in setting up a time scale for a frame of reference. In order to have a time scale valid for a whole frame of reference we must have a number of clocks distributed throughout the frame so that there will everywhere be a nearby clock which can be used to measure time in its vicinity. These clocks must be synchronized; that is, we must be able to say of any two of these separated clocks A and B: "The little hand of clock A and the little hand of clock B pointed to 7 simultaneously."

A number of methods for determining simultaneity at separated locations are probably now suggesting themselves to the student. They surely all involve the transmission of signals between the two locations. If we had at our disposal a method of transmitting signals with in-

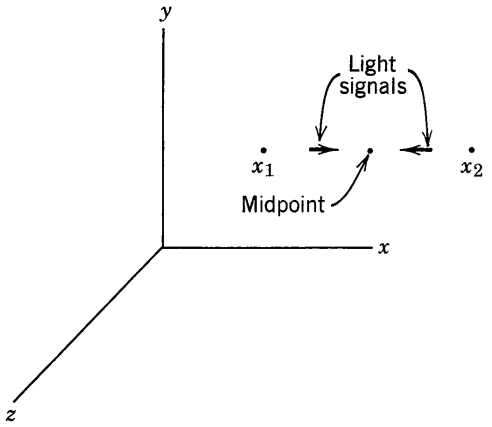

Figure A-2 Illustrating Einstein's definition of simultaneity of separated events.

finite velocity there would be no more of a problem in determining the simultaneity of events occurring at separated locations than there is of doing it for events occurring at the same location. This is where the Galilean transformation goes wrong by implicitly assuming the existence of such a method of synchronization. In fact, there is no such method. Since we have agreed to be realistic in developing a time scale, we must use real synchronization signals. Light (or other electromagnetic) signals are clearly the most appropriate because they have the same propagation velocity under all circumstances. This property enormously simplifies the process of determining simultaneity. Thus we are led to Einstein's *definition of simultaneity of separated events*:

An event occurring at time t_1 and location x_1 is simultaneous with an event occurring at time t_2 and location x_2 if light signals emitted at t_1 from x_1 and at t_2 from x_2 arrive simultaneously at the geometrically measured midpoint between x_1 and x_2.

This definition, illustrated in Figure A-2, makes the very reasonable statement that two separated events are simultaneous to an observer located at their midpoint if he sees them happening simultaneously. Note that in Einstein's theory simultaneity in time does not have an absolute meaning, independent of location in space, as it does in the classical theory. The definition intimately mixes the times t_1, t_2 and the space coordinates x_1, x_2.

A consequence of this is that two events which are simultaneous when observed from one frame of reference are generally not simultaneous when observed from a second frame of reference which is moving relative to the first. To see this, we consider a very simple "thought experiment," adapted from one used by Einstein. Figure A-3 illustrates the following sequence of events from the point of view of an observer O who is at rest relative to the ground. This observer has so placed two charges of dynamite C_1 and C_2 that the distances $\overline{OC_1}$ and $\overline{OC_2}$ are equal. He causes them to explode simultaneously in his frame of reference by simultaneously sending out light signals to C_1 and C_2 which actuate detonators. (He is invoking a reciprocal of the definition quoted earlier.) Assume that he does this so that, in his frame, the explosions occur when he is abreast of O', an observer stationed on a train moving by at a very high velocity **v**. The explosions leave marks C_1' and C_2' on the side of the train. After the experiment, O' can measure the distances $\overline{O'C_1'}$ and $\overline{O'C_2'}$. He must, and will, find them equal because otherwise space would not be homogeneous. The explosions also produce flashes of light. Observer O will receive the flashes simultaneously, confirming that in his frame the explosions occurred simultaneously. However O' will receive the flash which originated at C_2' before he receives the flash from C_1' simply because the train moved during the finite time required for the light

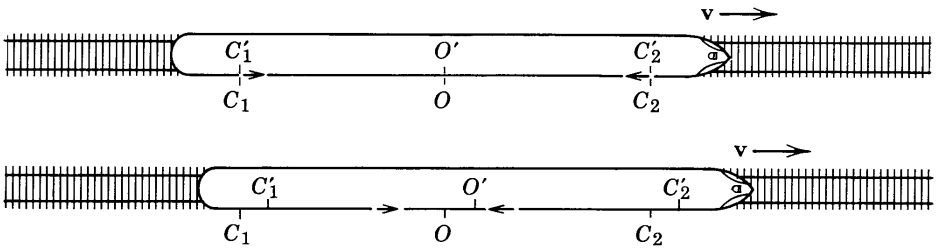

Figure A-3 Two successive views of a train moving with constant velocity **v**, from the viewpoint of a ground based observer O. The small arrows indicate flashes of light.

to reach him. Since the explosions occurred at points equidistant from O', but the light signals were not received simultaneously, he must conclude that in his frame of reference the explosions were not simultaneous.

Such disagreements concerning simultaneity lead to interesting results. From the viewpoint of O, $\overline{C_1C_2} = \overline{C_1'C_2'}$. But according to O', C_2' passed C_2 before C_1' passed C_1 since he received the signal from C_2' first. Therefore O' must conclude that $\overline{C_1C_2} < \overline{C_1'C_2'}$. If this is not apparent, it can be demonstrated by constructing diagrams showing the sequence of events from the viewpoint of O'. The simultaneity disagreement will also cause the two observers to disagree concerning the rates of clocks fixed in their respective frames of reference. As we shall see, the nature of their disagreements about the measurement of distance and time intervals is such as to allow both O and O' to find the same value c for the velocity of the light pulses which came from C_1 or C_2.

TIME DILATION AND LENGTH CONTRACTION

We consider here a second thought experiment designed to facilitate the quantitative evaluation of two relativistic effects that were noted qualitatively in the preceding thought experiment. An observer O', moving with velocity $\mathbf{v}$ relative to observer O, wishes to compare a time interval measured by his clock with a measurement of the same time interval made by clocks belonging to O. They have already established that, when at rest with respect to each other, all the clocks involved run at the same rate and are synchronized. Now it is apparent that, even when in relative motion, the reading of an O' clock can be compared with the reading of an O clock that happens to be momentarily coincident with the former without any complication. Thus measurements of a time interval made with clocks in the two frames can be compared by the procedure illustrated in Figure A-4. O' sends a light signal to a mirror, which reflects it back to him. Both O and O' record the emission of the signal with clocks C_1 and C', which are coincident at that instant. They use the clocks C_2 and C', which are coincident when the light signal is received back from the mirror, to record the time of its reception. The two events defining the beginning and end of the time interval to be compared are the emission and reception of the light signal.

The elapsed time between these two events measured by O' is $T' = 2\Delta t'$, where $\Delta t' = l'/c$ with l' the distance to the mirror measured in his frame. The elapsed time measured by O is $T = 2\Delta t$. From the figure, and the Pythagorean theorem, it is apparent that

$$c^2\Delta t^2 = v^2\Delta t^2 + l^2$$

where l is the distance to the mirror as measured by O. Solving for Δt, we have

$$\Delta t^2 = \frac{l^2}{c^2 - v^2} = \frac{l^2}{c^2}\frac{1}{1 - v^2/c^2}$$

or

$$\Delta t = \frac{1}{c}\frac{1}{\sqrt{1 - v^2/c^2}}$$

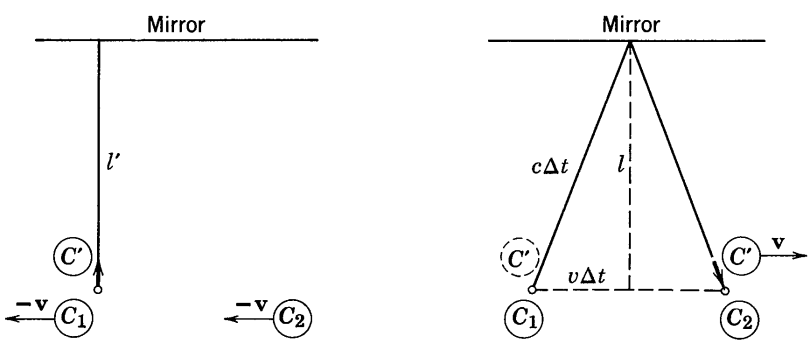

Figure A-4 The comparison of a time interval measured by two observers. *Left:* The figure shows the situation at the instant of emission of a light signal (the small arrow), from the point of view of O'. *Right:* The figure shows the situation at the instant of its reception, from the point of view of O.

Now it is easy to show that observers in relative motion cannot disagree about the measurement of distances *perpendicular* to the direction of motion because disagreements about simultaneity concern finite synchronization signal propagation times for propagation in the direction parallel to the direction of relative motion. Thus we have $l = l'$, and so

$$\Delta t = \frac{l'}{c}\frac{1}{\sqrt{1 - v^2/c^2}} = \frac{\Delta t'}{\sqrt{1 - v^2/c^2}}$$

Therefore we obtain

$$T = \frac{1}{\sqrt{1 - v^2/c^2}}\,T' \tag{A-5}$$

We have found that a time interval between two events occurring at the same place in a certain frame is measured to be *longer* by a factor of $1/\sqrt{1 - v^2/c^2}$ in a frame moving relative to the first frame and, consequently, in which the two events occur at separated locations. The time interval measured in the frame in which the events occurred in the same place is called the *proper time.* The effect involved is called *time dilation.*

Next we consider the same thought experiment, but we imagine a measuring rod placed in the O frame with one end at clock C_1 and the other end at clock C_2. Designate by L the length of the rod measured in the O frame, with respect to which it is at rest. We want to evaluate L', the length of the rod measured from the O' frame.

In this frame the rod is moving in a direction parallel to its own length. Since the velocity of O' with respect to O is $\mathbf{v}$, the velocity of O, and also of the rod, with respect to O' must be precisely $-\mathbf{v}$. Otherwise there would be an inherent asymmetry between the two frames that is not allowed by Einstein's postulate. T' is the time interval between the instant when O' sees the front end of the rod pass his clock C' and the instant when he sees the rear end pass the clock. This time interval is related to the length L' of the rod as measured in the O' frame, and to the magnitude v of its velocity measured in that frame, by the equation

$$L' = vT'$$

We may also establish an equation connecting the corresponding quantities as measured in the O frame. In this frame C', which is moving with velocity of magnitude v, travels the distance L in time T. Thus

$$L = vT$$

From the last two equations we obtain

$$L' = L\frac{T'}{T}$$

But the time dilation argument shows that

$$\frac{T'}{T} = \sqrt{1 - v^2/c^2}$$

Therefore

$$L' = \sqrt{1 - v^2/c^2}\,L \tag{A-6}$$

We have found that a rod is measured to be *shorter* by a factor $\sqrt{1 - v^2/c^2}$ when the measurement is made in a frame in which it is moving *parallel* to its own length, compared to its length measured in a frame in which it is at rest. The length of the rod measured in the frame in which it is at rest is called its *proper length.* The effect is called the *Lorentz contraction.* Note that a comparison of (A-6) with the equation immediately above it shows the factor relating the primed to the uprimed time interval is the same as (and not the reciprocal of) the factor relating the primed to the uprimed distance interval.

It is not difficult to understand why the phenomenon of Lorentz contraction is unobservable in classical physics. Consider a railroad train which when stationary with respect to the ground has a measured length of 1 km. This is its proper length. If it is moving over the ground at velocity $v = 100$ km/hr $= 27.8$ m/sec and its length is measured from the ground, (A-6) predicts that the value obtained will be less than 1 km. But not by much. In fact, since $v^2/c^2 = (27.8/3.00 \times 10^8)^2 = 8.59 \times 10^{-15}$, the value of the Lorentz contraction factor is $\sqrt{1 - v^2/c^2} = \sqrt{1 - 8.59 \times 10^{-15}} \simeq 1 - (1/2) \times 8.59 \times 10^{-15} = 1 - 4.30 \times 10^{-15}$. Thus

the length of the train is predicted to be contracted by about four parts in 10^{15}. Such an effect would be completely unobservable because the lengths of objects dealt with in classical physics cannot be measured with the necessary accuracy.

However, time intervals occurring in classical physics can be measured with very great accuracy using atomic clocks. This makes it just possible to observe time dilation with classical objects. An experiment performed in 1971 did so by sending atomic clocks on a trip around the earth in commercial airliners, and comparing the readings of the traveling clocks with a reference atomic clock at the U.S. Naval Observatory. After various corrections were made to account for things having nothing to do with time dilation, the traveling clocks showed smaller readings, compared to the reference clock, which amounted to about 3×10^{-7} sec for the entire round trip. This agreed, to the 0.2×10^{-7} sec accuracy of the measurement, with the predictions of (A-5).

Both length contraction and time dilation are easy to observe for objects moving at velocities whose magnitudes are an appreciable fraction of that of light. A particularly convincing example is found in the behavior of particles called muons. These are known to be formed at an elevation of around 10,000 m, near the top of the atmosphere, as a byproduct of collisions of rapidly moving cosmic rays with the molecular constituents of the atmosphere. The muons are projected toward the surface of the earth at velocities of about $0.999c$. They are unstable particles; on the average each lives for 2.2×10^{-6} sec, as measured in a reference frame in which the muons are stationary, before decaying into other particles. Now a particle moving at essentially 3.0×10^{8} m/sec for 2.2×10^{-6} sec will travel only 660 m. Hence it might seem that all muons would have decayed long before they are able to reach the ground, since they must travel around 10,000 m to do so. But, in fact, observations show that nearly all the muons formed at the top of the atmosphere reach ground level.

Time dilation explains the observations. A prediction as to whether or not a muon can traverse the thickness of the atmosphere before it decays should not use 2.2×10^{-6} sec for the time available. This value is the proper time the particles live, on the average, because it is measured in a reference frame in which they are at rest. Instead, the corresponding dilated time should be used since the observations are made in a reference frame in which the muons are moving at a very high velocity. For $v/c = 0.999$, the time dilation factor has the value $1/\sqrt{1 - v^2/c^2} = 1/\sqrt{1 - 0.998} = 1/0.045 = 22$. Hence the dilated lifetime has the value $22 \times 2.2 \times 10^{-6}$ sec $= 4.9 \times 10^{-5}$ sec. A particle moving at 3.0×10^{8} m/sec for this time will travel a distance of 14,000 m, more than enough to reach ground level before decaying.

An alternative explanation of the observations concerning muons involves Lorentz contraction. It carries out the calculation in a reference frame in which the muons are stationary, instead of in one in which the atmosphere is stationary. The muons live their proper lifetime 2.2×10^{-6} sec in this reference frame. But in it the proper thickness of the atmosphere is Lorentz-contracted by the factor $\sqrt{1 - v^2/c^2} = 0.045$, and is only $0.045 \times 10{,}000$ m $= 450$ m thick. The time required for the atmosphere to move past the muons, as observed in the reference frame in which they are stationary, is its contracted thickness divided by its velocity, or $450 \text{ m}/3.0 \times 10^{8}$ m/sec $= 1.5 \times 10^{-6}$ sec. Since this is less than their proper lifetime, there is no difficulty in understanding how it happens.

THE LORENTZ TRANSFORMATION

Now we shall obtain the equations that are used in relativity theory to transform space and time variables from one frame to another moving with constant velocity relative to the first. Our argument will be guided by what we have already learned, but in the final analysis it is an independent derivation based on the experimental evidence that the velocity of light is independent of the motion of the observer and of the source.

We consider a third thought experiment involving two observers O' and O, with O' moving relative to O at velocity of magnitude v in the positive direction of the x' and x axes. Their $x'y'$ and xy planes always coincide, as in Figure A-1, and the origins of their reference frames coincide at the instant $t' = t = 0$. At that instant O' ignites a flash bulb at his origin which produces a wavefront of light that expands away from the point of emission with velocity of magnitude c in all directions. Therefore, according to O' at time t', the wave front will be a

sphere, centered on his origin, of radius $r' = ct'$. The coordinates of any point on the wave front at that time will thus satisfy the equation of a sphere

$$x'^2 + y'^2 + z'^2 = c^2t'^2 \tag{A-7}$$

But it will be equally true that according to O the light is expanding away from the point of emission, his origin, with velocity of magnitude c in all directions. Thus from the point of view of O the wave front at time t is also a sphere of radius $r = ct$ centered on his own origin, and satisfying the equation

$$x^2 + y^2 + z^2 = c^2t^2 \tag{A-8}$$

We shall find relations between the two sets of variables (x',y',z',t') and (x,y,z,t) which allow both (A-7) and (A-8) to be valid, i.e., which transform one equation into the other.

We are guided by our earlier considerations to assume the following form for the transformation equations

$$\begin{aligned} x' &= \gamma(x - vt) \\ y' &= y \\ z' &= z \\ t' &= \gamma(t + \delta) \end{aligned} \tag{A-9}$$

where γ is a dimensionless quantity, presumably involving the relative velocity of the two frames, v, and the velocity of light, c, and where δ is a quantity, also presumably involving these velocities, which must have the dimensions of time. Expressions for γ and δ will be determined soon, but we can say even now that we should have $\gamma \to 1$ and $\delta \to 0$ if $v/c \to 0$. The reason is that for $\gamma = 1$ and $\delta = 0$ (A-9) reduce to the Galilean transformation (A-1), which is as it should be since the Galilean transformation would be essentially correct if the relative velocity v of the frames is extremely small compared to the velocity c of the signals used to synchronize the clocks in the frames. We inserted the additive term δ in the fourth equation when v/c is not small because according to O' the time of some event measured by O must be corrected for a synchronization error between the clock used by O at the event and the clock used by O at his origin, as discussed in our first thought experiment. Having accounted for synchronization, we put the multiplicative factor γ in the fourth equation to account for the discrepancy in time intervals measured by O' and O, as discussed in our second thought experiment. As was also discussed there, the same factor γ should appear in the first of (A-9) to account for the discrepancy in distance intervals measured by the two observers. Since y and z are distances measured perpendicular to the direction of relative motion, we assumed that their values will not be changed by the transformation.

Now let us see whether the forms assumed in (A-9) can actually transform (A-7) into (A-8) and, if so, what expressions for δ and γ are required to accomplish this. Using (A-9) to rewrite each variable in (A-7) in terms of the unprimed variables, we have

$$\gamma^2(x^2 - 2vxt + v^2t^2) + y^2 + z^2 = c^2\gamma^2(t^2 + 2\delta t + \delta^2)$$

As we must obtain from this (A-8), which does not contain a term with the combination of variables xt, the second term in the parentheses on the left side must be canceled by something on the right side. For the cancelation to be obtained for all values of the independent variable t, it must be due only to the second term in the parentheses on the right. Thus we must have

$$-\gamma^2 2vxt = c^2\gamma^2 2\delta t$$

or

$$\delta = -vx/c^2 \tag{A-10}$$

Note that δ has the dimensions of time, and that $\delta \to 0$ if $v/c \to 0$, as predicted earlier. A reconsideration of our first thought experiment will make it apparent why the synchronization correction δ is linearly proportional to both v and x. Gathering the factors of x^2 and t^2 in the remaining terms of the equation after evaluating δ^2, we obtain

$$x^2\gamma^2(1 - v^2/c^2) + y^2 + z^2 = c^2t^2\gamma^2(1 - v^2/c^2)$$

Comparing this with the required form, (A-8), we see that we shall obtain it if

$$\gamma^2(1 - v^2/c^2) = 1$$

or

$$\gamma = \frac{1}{\sqrt{1 - v^2/c^2}} \tag{A-11}$$

Note that γ is dimensionless, and that $\gamma \to 1$ if $v/c \to 0$, as also predicted earlier. Considering the results of our second thought experiment, it is not surprising that γ involves the expression $\sqrt{1 - v^2/c^2}$. Finally, we use (A-10) and (A-11) to evaluate γ and δ in (A-9), and successfully complete our derivation of the *Lorentz transformation*

$$\begin{aligned} x' &= \frac{1}{\sqrt{1 - v^2/c^2}}(x - vt) \\ y' &= y \\ z' &= z \\ t' &= \frac{1}{\sqrt{1 - v^2/c^2}}(t - vx/c^2) \end{aligned} \tag{A-12}$$

The space-time variables transformation of relativity is called the Lorentz transformation for the historical reason that equations of the same mathematical form (but with a very different physical significance because v represented a velocity with respect to the ether frame instead of a velocity of any inertial frame with respect to any other inertial frame) had been proposed by Lorentz in connection with a classical theory of electrons some years before the work of Einstein.

The Lorentz transformation reduces, as expected, to the Galilean transformation when the relative velocity of the two frames, v, is small compared to the velocity of light, c. But significant differences between the predictions of the Galilean transformation and those of the rigorously correct Lorentz transformation are found when v is comparable to c. These had not been observed in classical physics because the appropriate experiments had not been performed. Many experimental results of quantum physics, some of which are discussed in this book, show that the Lorentz transformation is, in fact, the one that accurately describes nature. Note that for v larger than c the Lorentz transformation equations are meaningless, in that real coordinates and times are transformed into imaginary ones. Thus c appears to play the role of a limiting velocity for all physical phenomena. We shall obtain a better understanding of this as we go further into relativity theory.

THE RELATIVISTIC VELOCITY TRANSFORMATION

Consider the particle shown in Figure A-5, moving with velocity **u** as measured in a frame of reference O. We would like to evaluate the velocity **u**′ of the particle as measured in the frame O', which is itself moving relative to O with velocity **v**.

Measured in the O frame, the velocity vector of the particle has components

$$u_x = \frac{dx}{dt} \qquad u_y = \frac{dy}{dt} \qquad u_z = \frac{dz}{dt}$$

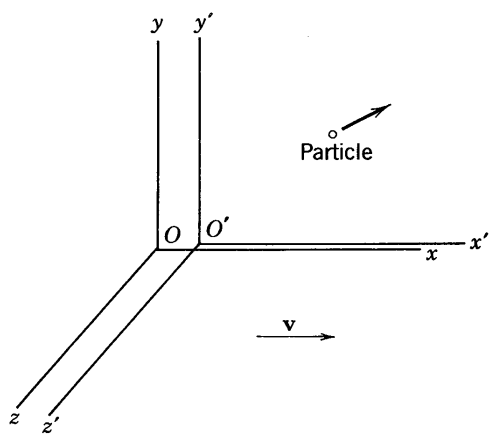

Figure A-5 A moving particle observed from two frames of reference O and O', with the latter moving relative to the former at velocity **v**.

The velocity vector, as measured in the O' frame, has components

$$u'_x = \frac{dx'}{dt'} \qquad u'_y = \frac{dy'}{dt'} \qquad u'_z = \frac{dz'}{dt'}$$

To establish the required relationships, we take the differentials of the Lorentz transformation, (A-12), remembering that v is a constant. This gives

$$\begin{aligned} dx' &= \frac{1}{\sqrt{1 - v^2/c^2}}(dx - v\,dt) \\ dy' &= dy \\ dz' &= dz \\ dt' &= \frac{1}{\sqrt{1 - v^2/c^2}}(dt - v\,dx/c^2). \end{aligned}$$

So we obtain

$$u'_x = \frac{dx'}{dt'} = \frac{\dfrac{1}{\sqrt{1 - v^2/c^2}}(dx - v\,dt)}{\dfrac{1}{\sqrt{1 - v^2/c^2}}\left(dt - \dfrac{v\,dx}{c^2}\right)} = \frac{\dfrac{dx}{dt} - v}{1 - \dfrac{v}{c^2}\dfrac{dx}{dt}} = \frac{u_x - v}{1 - \dfrac{vu_x}{c^2}}$$

$$u'_y = \frac{dy'}{dt'} = \frac{dy}{\dfrac{1}{\sqrt{1 - v^2/c^2}}\left(dt - \dfrac{v\,dx}{c^2}\right)} = \frac{\dfrac{dy}{dt}}{\dfrac{1}{\sqrt{1 - v^2/c^2}}\left(1 - \dfrac{v}{c^2}\dfrac{dx}{dt}\right)} = \frac{\sqrt{1 - v^2/c^2}\,u_y}{1 - \dfrac{vu_x}{c^2}} \tag{A-13}$$

$$u'_z = \frac{dz'}{dt'} = \frac{dz}{\dfrac{1}{\sqrt{1 - v^2/c^2}}\left(dt - \dfrac{v\,dx}{c^2}\right)} = \frac{\dfrac{dz}{dt}}{\dfrac{1}{\sqrt{1 - v^2/c^2}}\left(1 - \dfrac{v}{c^2}\dfrac{dx}{dt}\right)} = \frac{\sqrt{1 - v^2/c^2}\,u_z}{1 - \dfrac{vu_x}{c^2}}$$

These equations constitute the relativistic velocity transformation.

Note that as v/c approaches zero (A-13) approach those which would be derived from the Galilean transformation. Another interesting property is that it is impossible to choose **u** and **v** such that u', the magnitude of the velocity measured in the new frame, is greater than c. Consider the example illustrated in Figure A-6. As measured by O, particle 1 has velocity $0.8c$ in the positive x direction and particle 2 has velocity $0.9c$ in the negative x direction. We evaluate the velocity of particle 1 as measured in a frame O' moving with particle 2 using the first of (A-13), with $u_x = u_1 = 0.8c$ and $v = -0.9c$. We obtain

$$u'_1 = \frac{0.8c - (-0.9c)}{1 - \dfrac{(-0.9c)(0.8c)}{c^2}} = \frac{1.70c}{1.72} = 0.99c$$

The velocity transformation equations demonstrate another aspect of the fact that c acts as a limiting velocity for all physical phenomena.

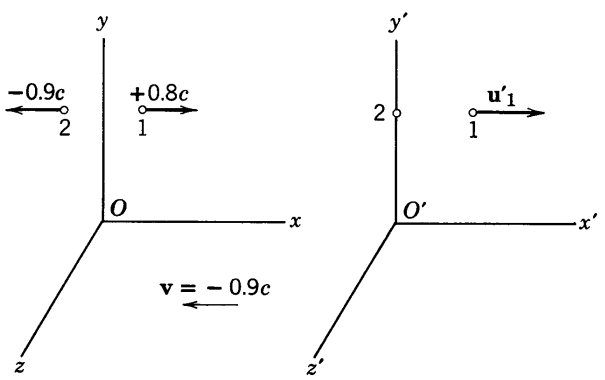

Figure A-6 Illustrating an example of the relativistic addition of velocities.

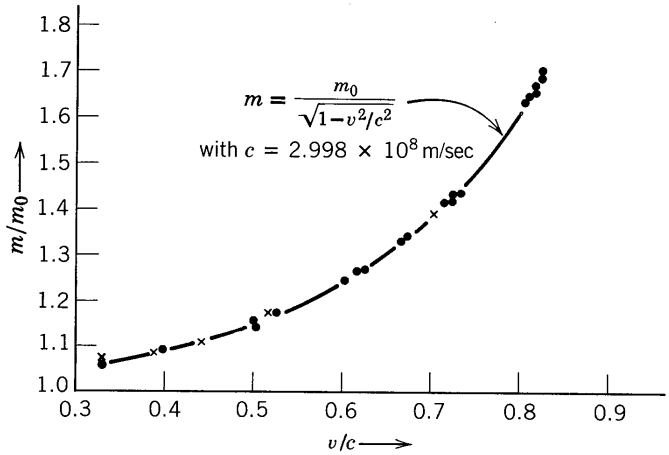

Figure A-9 An experimental verification of the dependence of mass on velocity.

For the quite high velocity $v = 0.1c$ the relativistic mass is only one-half of 1% greater than the rest mass. But with increasing v the relativistic mass rapidly increases since $m(v) \to \infty$ as $v \to c$ if m_0 has any finite value. It is apparent that the velocity of a particle cannot exceed c.

The first experimental confirmation of the predictions of relativity theory concerning the dependence of mass on velocity was provided by Bucherer in 1909. He applied to electrons of high velocity a variation of the technique used by Thomson to measure the charge to mass ratio of slowly moving electrons (described in most elementary physics texts). Bucherer's results are shown by the crosses in Figure A-9, some more extensive results obtained in recent years are shown by dots, and the predictions of (A-18) are shown by the solid curve. Note that these results prove not only that (A-18) has the correct functional form, but also that the velocity c, which essentially enters the theory of relativity as the limiting velocity for the transmission of information, actually is equal to the velocity of light, 2.998×10^8 m/sec.

RELATIVISTIC ENERGY

Consider a particle of rest mass m_0 initially stationary at $x = x_i$. A force of magnitude F is then applied in the positive x direction and the particle moves under the influence of the force. It is interesting to calculate the total work done by the force when the particle moves to $x = x_f$. We shall label this work K. Taking the usual definition of work, we have

$$K = \int_{x_i}^{x_f} F\,dx$$

In order to evaluate the integral we must know the relativistic form of Newton's equation of motion. With a relativistically acceptable expression for momentum $\mathbf{p} = m\mathbf{v}$, where m is the relativistic mass, we can with confidence take over into relativity Newton's equation in the form of (A-14). For the one-dimensional situation of interest here, it reads

$$F = \frac{d(mv)}{dt} = m\frac{dv}{dt} + v\frac{dm}{dt}$$

Hence we have

$$K = \int_{x_i}^{x_f} F\,dx = \int_{x_i}^{x_f} \left(m\frac{dv}{dt} + v\frac{dm}{dt}\right) dx$$

To obtain an easy evaluation of this integral, we go through the following sequence of manipulations. First we write the relation (A-18) between m and v in the form

$$m^2(1 - v^2/c^2) = m_0^2$$

This immediately yields

$$m^2c^2 - m^2v^2 = m_0^2c^2$$

Next we differentiate each term with respect to time, to obtain

$$c^2 \frac{d(m^2)}{dt} - \frac{d(m^2v^2)}{dt} = 0$$

or

$$2c^2m\frac{dm}{dt} - 2m^2v\frac{dv}{dt} - 2v^2m\frac{dm}{dt} = 0$$

or

$$m\frac{dv}{dt} + v\frac{dm}{dt} = c^2\frac{dm}{dt}\frac{1}{v} = c^2\frac{dm}{dt}\frac{dt}{dx} = c^2\frac{dm}{dx}$$

We have used the fact that $v = dx/dt$ so that $1/v = dt/dx$. Now we can write

$$K = \int_{x_i}^{x_f} c^2\frac{dm}{dx}dx = c^2\int_{m_i}^{m_f} dm = c^2(m_f - m_i)$$

where m_i and m_f are the masses of the particle when it is at positions x_i and x_f, respectively. But $m_i = m_0$ since the particle starts from rest at x_i and, according to (A-18), the mass of the particle as it moves past x_f with velocity v is $m_f = m_0/\sqrt{1 - v^2/c^2}$. So we have

$$K = \frac{m_0c^2}{\sqrt{1 - v^2/c^2}} - m_0c^2 \tag{A-19}$$

Now the classical law of energy conservation implies that the total work done by the force acting on the particle should equal its kinetic energy. Thus we would like to call K the kinetic energy of the particle. To check in the classical limit take $v/c \ll 1$, and expand the reciprocal of the square root, to obtain

$$K = m_0c^2\left[\left(1 - \frac{v^2}{c^2}\right)^{-1/2} - 1\right] \simeq m_0c2\left[1 + \frac{1}{2}\frac{v^2}{c2} - 1\right]$$

or

$$K \simeq \frac{m_0c^2}{2}\frac{v^2}{c^2} = \frac{m_0v^2}{2}$$

This agrees with the classical expression for kinetic energy, and confirms our identification of K in (A-19) as the *relativistic kinetic energy.*

Continuing the interpretation of (A-19), we observe that K is a function of v which can be written as the difference between a term depending on v and a constant term, as follows

$$K(v) = E(v) - E(0)$$

where $E(v) = m_0c^2/\sqrt{1 - v^2/c^2} = mc^2$, with m the relativistic mass; and where $E(0)$ is the value of $E(v)$ for $v = 0$, i.e., $E(0) = m_0c^2$. Since K is an energy, $E(v)$ and $E(0)$ must also be energies—$E(v)$ being some energy associated with the particle when its velocity is v, and $E(0)$ some energy associated with the particle when its velocity is 0. To identify these energies, we rewrite the equation as

$$E(v) = K(v) + E(0)$$

The conclusion is inescapable. We must interpret $E(v)$ as the total energy of the particle moving with velocity v, since it is the sum of the kinetic energy $K(v)$ of the particle and an intrinsic energy $E(0)$ associated with the particle when it is at rest. The energy $E(v)$ is called the *total relativistic energy*, and $E(0)$ is called the *rest mass energy.*

We have established Einstein's well known relations between mass and energy: *The rest mass energy $E(0)$ of a particle is c^2 times its rest mass m_0*

$$E(0) = m_0c^2 \tag{A-20}$$

and *the total relativistic energy E of a particle is c^2 times its relativistic mass m*

$$E = mc^2 \tag{A-21}$$

Equation (A-19) tells us the relation between total relativistic energy E, relativistic kinetic energy K, and the rest mass energy m_0c^2

$$E = K + m_0c^2 \tag{A-22}$$

Interval: I = ds^2 = - c^2dt^2 + dx^2 + dy^2 + dz^2

THE SPECIAL THEORY OF RELATIVITY: Notes on Light-Cone diagram

Depending on the two events in question, the interval can be positive, negative, or zero:

1. If $I < 0$ we call the interval **timelike**, for this is the sign we get when the two occur at the *same place* ($d = 0$), and are separated only temporally.
2. If $I > 0$ we call the interval **spacelike**, for this is the sign we get when the two occur at the *same time* ($t = 0$), and are separated only spatially.
3. If $I = 0$ we call the interval **lightlike**, for this is the relation that holds when the two events are connected by a signal traveling at the speed of light.

If the interval between the two events is timelike, there exists an inertial system (accessible by Lorentz transformation) in which they occur at the same point. For if I hop on a train going from (A) to (B) at the speed $v = d/t$, leaving event A when it occurs, I shall be just in time to pass B when *it* occurs; in the train system, A and B take place at the same point. You cannot do this for a *spacelike* interval, of course, because v would have to be greater than c, and no observer can exceed the speed of light (γ would be imaginary and the Lorentz transformations would be nonsense). On the other hand, if the interval is spacelike, then there exists a system in which the two events occur at the same time

---

Space-time diagrams. If you want to represent the motion of a particle graphically, the normal practice is to plot the position versus time (that is, x runs vertically and t horizontally). On such a graph, the velocity can be read off as the slope of the curve. For some reason the convention is reversed in relativity: everyone plots position horizontally and time (or, better, $x^0 = ct$) vertically. Velocity is then given by the *reciprocal* of the slope. A particle at rest is represented by a vertical line; a photon, traveling at the speed of light, is described by a 45° line; and a rocket going at some intermediate speed follows a line of slope $c/v = 1/\beta$ (Fig. 12.21). We call such plots **Minkowski diagrams**.

The trajectory of a particle on a Minkowski diagram is called a **world line**. Suppose you set out from the origin at time $t = 0$. Because no material object can travel faster than light, your world line can never have a slope less than 1. Accordingly, your motion is

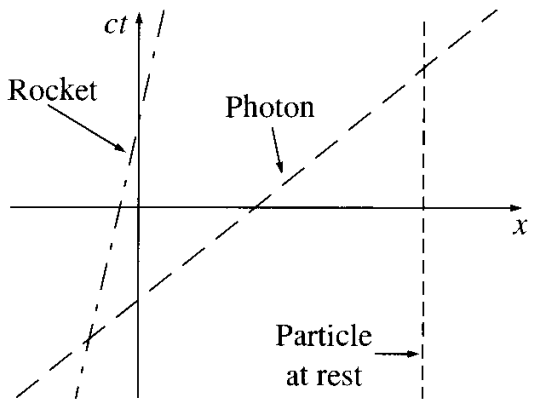

Figure 12.21

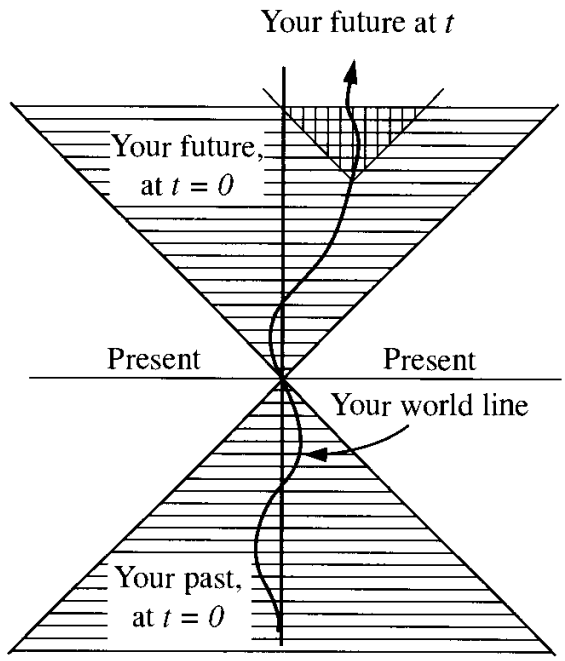

Figure 12.22

restricted to the wedge-shaped region bounded by the two 45° lines (Fig. 12.22). We call this your "future," in the sense that it is the locus of all points accessible to you. Of course, as time goes on, and you move along your chosen world line, your options progressively narrow: your "future" at any moment is the forward "wedge" constructed at whatever point you find yourself. Meanwhile, the *backward* wedge represents your "past," in the sense that it is the locus of all points from which you might have come. As for the rest (the region outside the forward and backward wedges) this is the generalized "present." You can't *get* there, and you didn't *come* from there. In fact, there's no way can can influence any event in the present (the message would have to travel faster than light); it's a vast expanse of spacetime that is absolutely inaccessible to you.

I've been ignoring the y and z directions. If we include a y axis coming out of the page, the "wedges" become cones—and, with an undrawable z axis, hypercones. Because their boundaries are the trajectories of light rays, we call them the **forward light cone** and the **backward light cone**. Your future, in other words, lies within your forward light cone, your past within your backward light cone.

Notice that the slope of the line connecting two events on a space-time diagram tells you at a glance whether the invariant interval between them is timelike (slope greater than 1), spacelike (slope less than 1), or lightlike (slope 1). For example, all points in the past and future are timelike with respect to your present location, whereas points in the present are spacelike, and points on the light cone are lightlike.

Hermann Minkowski, who was the first to recognize the full geometrical significance of special relativity, began a classic paper with the words, "Henceforth space by itself, and time by itself, are doomed to fade away into mere shadows, and only a kind of union of the two will preserve an independent reality." It is a lovely thought, but you must be careful

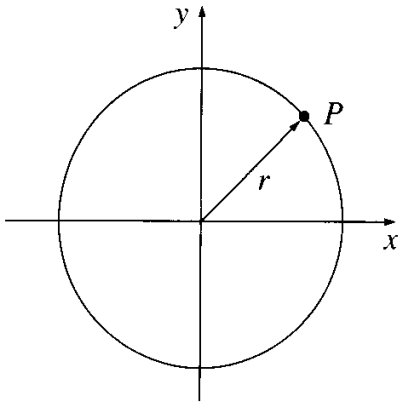

Figure 12.23

not to read too much into it. For it is not at all the case that time is "just another coordinate, on the same footing with x, y, and z" (except that for obscure reasons we measure it on clocks instead of rulers). *No:* Time is *utterly different* from the others, and the mark of its distinction is the minus sign in the invariant interval. That minus sign imparts to spacetime a hyperbolic geometry that is much richer than the circular geometry of 3-space.

Under rotations about the z axis, a point P in the xy plane describes a *circle:* the locus of all points a fixed distance $r = \sqrt{x^2 + y^2}$ from the origin (Fig. 12.23). Under Lorentz transformations, however, it is the interval $I = (x^2 - c^2t^2)$ that is preserved, and the locus of all points with a given value of I is a *hyperbola*—or, if we include the y axis, a *hyperboloid of revolution.* When the interval is *timelike*, it's a "hyperboloid of two sheets" (Fig. 12.24a); when the interval is *spacelike*, it's a "hyperboloid of one sheet" (Fig. 12.24b). When you perform a Lorentz transformation (that is, when you go into a moving inertial system), the coordinates (x, t) of a given event will change to $(\bar{x}, \bar{t})$, but these new coordinates *will lie on the same hyperbola* as (x, t). By appropriate combinations of Lorentz transformations

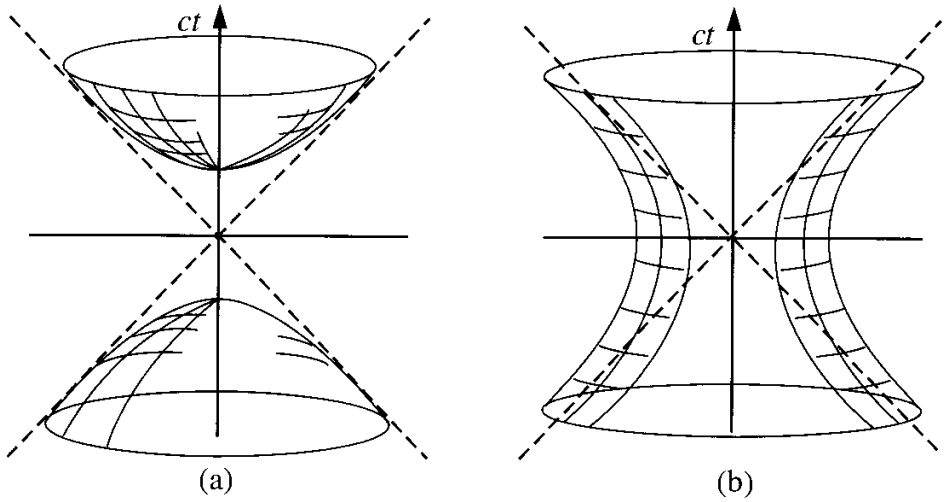

Figure 12.24

and rotations, a spot can be moved around at will over the surface of a given hyperboloid, but no amount of transformation will carry it, say, from the upper sheet of the timelike hyperboloid to the lower sheet, or to a spacelike hyperboloid.

When we were discussing simultaneity I pointed out that the time ordering of two events can, at least in certain cases, be reversed, simply by going into a moving system. But we now see that this is not *always* possible: *If the invariant interval between two events is timelike, their ordering is absolute; if the interval is spacelike, their ordering depends on the inertial system from which they are observed.* In terms of the space-time diagram, an event on the upper sheet of a timelike hyperboloid *definitely* occurred *after* (0, 0), and one on the lower sheet certainly occurred *before;* but an event on a spacelike hyperboloid occurred at positive t, or negative t, depending on your reference frame. This is not an idle curiosity, for it rescues the notion of **causality**, on which all physics is based. If it were *always* possible to reverse the order of two events, then we could never say "A caused B," since a rival observer would retort that B *preceded* A. This embarrassment is avoided, provided the two events are timelike-separated. And causally related events *are* timelike-separated—otherwise no influence could travel from one to the other. *Conclusion:* The invariant interval between causally related events is always timelike, and their temporal ordering is the same for all inertial observers.